داتیس کار

شرکت تولیدی صنعتی

DATISKAR

INDUSTRIAL CO.

Unit Heater

یونیت هیتر

شرکت تولیدی صنعتی
داتیس کار

Unit Heater

Selection Procedure
Hot Water :
Given:
Design Heating Load=160,000 BTU.hr
Ent. Air Temp. =50 °F
Ent. Water Temp = 220 °F
Design Water Temp. Drop = 25 °F
Determine : The Unit (s) Requierd
Leaving Air Temp.
Air Flow Rate @ Final Air Temp.
Hot Water Flow Rate (Actual)
Hot Water Press Drop (Actual)

From Table 4 @ Ent. Air Temp of 50 °F And Ent. Hot Water Temp. of 220 °F . The Correction Factor is 1.429 Therefore, The Unit(s) Shall Nominally Match:

$$\frac{160}{1.429} = 111.96 * 10\ ^3\ BTU/h$$

So, From Table 1 And DKUH - 31 Offering 121498 BTU/h @2100 CFM And Water Flow Rate Of 12.5 GPM Is Selected
Hence, The Corrected Unit Capacity = (121498)(1.429) = 173.62 * 10^3 BTU/h
Satisfies The Design Heating Load.

Correction Unit Air Rate = (Nominal Air Flow Rate)(Correction Factor)
Table 1 Table 5

$$\text{Leaving air Temp.} = \frac{\text{Corrected Unit Capacity (btu/hr)}}{\text{Corrected Unit Air Flow Rate * 1.082}} + \text{Ent. Air Temp.}$$

$$= \frac{173620}{2142 * 1.082} + 50 = 124.91$$

$$\text{Air Flow Rate @ Final Air Temp.} = (\text{Nominal Unit Air Flow Rates}) * \left(\frac{460 + \text{Lvg. Air Temp}}{460 + \text{Ent. Air Temp}}\right)$$

$$= (2100)\frac{(460+124.91)}{(460+50)} = 2408\ CFM$$

$$\text{Hot Water Flow Rate (Actual)} = \frac{\text{Corrected Unit Capacity (BTU/HR)}}{\text{500 * Design Hot Water Temp. Drop}}$$

$$= \frac{173620}{500 * 25} = 13.89\ GPM$$

$$\text{GPM Ratio} = \frac{\text{Design GPM}}{\text{Nominal GPM}} = \frac{13.89}{12.5} = 1.11$$

From Tabel 6 And GPM Ratio Calculated As A Percentage Value,
The Extracted Correction Factor is - 1.2
P.D (Actual) = (Nominal Press. Drop) (Correction Factor Above) = (2.5)(1.2) = 3 FT W.G

Steam:
Given:
Design Heating Load = 130000 (BTU/HR)
Ent. Air Temp. = 50 °F
Steam press Available = 5 Psig
Determine : The Unit(s) Requierd
Leaving Air Temp.
Condense Mass Flow Rate

From Table 3, Steam Correction Factor @ 50 °F Ent. Air Temp. And Steam Press of 5 Psig is 0.846 Therefore, The Unit (s) Shall Nominally Match :

$$\frac{130000}{0.846} = 154000\ (BTU/HR)$$

So, From Table 2, Two DUHS.30 Units Are Chosen . Hence The Total Corrected Capacity
= (165847)(0.846) = 140306 (BTU/HR) Satisfies The Design Heating Load.

- Total Corrected Air Flow Rate = (Nominal Unit Air Flow Rate) (Correction Factor) (No. of Units)
Table1 Table5
= (2200)(1.02) = 2244 CFM

$$\text{- Leaving Air Temp.} = \frac{\text{Total Corrected Unit (s) Capacity (BTU/HR)}}{\text{Corrected Unit Air Flow Rate * 1.085}} + \text{Ent Air Temp.}$$

$$= \frac{140306 + 50}{2244 * 1.085} = 107.6\ °F$$

$$\text{- Condensate Mass Flow Rate} = \frac{\text{Total Corrected Unit (s) Capacity (BTU/HR)}}{\text{Latent Heat Of Condensation For Steam At 5 psig (BTU/LB)}}$$

$$= \frac{140306}{960.54} = 146\ LB/HR$$

شرکت تولیدی صنعتی
داتیس کار

Hot Water Unit Heater Ratings

TABEL1:

185 °f Entering Water n And 60 °f Entering Air								
model	BTU/h	Motor		C.F.M	G.P.M	Leaving Air Temp. (°F)	Water Temp(°f) Drop	Pressure Drop F.T.of Water
		RPM	W					
DUH.10	38298	1400	130	1000	3.8	100	13	0.8
	42994				4.3	105	10	0.9
	47501				4.7	108	8	1.2
DUH.16	63198	1400	140	1400	6.4	103	18	0.60
	70931				7.2	107	12	0.90
	76998				7.9	109	11	1.10
DUH.25	94796	1400	140	1700	9.5	101	17	1.0
	106597				10.6	106	12	2.5
	115495				11.5	114	10	3.5
DUH.31	121498	1400	165	2100	12.5	103	23	0.97
	137800				13.8	106	16	1.25
	146997				14.7	113	13.5	1.45
DUH.37	147898	1400	210	2500	14.8	101	21	1.7
	163265				16.5	108	17	2.6
	178499				18.0	114	12.7	2.9
DUH.52	204296	1400	310	3000	21	100	13	1.8
	225368				22.5	107	18	2.6
	247494				24.8	111	12.9	2.9
DUH.60	290531	1400	320	3500	29.0	101	17.9	1.3
	303398				30.0	106	18.3	2.2
	324655				32.4	110	16.2	3.1
DUH.67	332670	1400	550	4000	33.3	99	19.1	2
	346781				34.6	100	18.6	2.6
	369397				36.9	108	18.3	3.4

Steam Unit Heater Ratings

TABEL2:

model	Capacity BTU/h	Motor		C.F.M	Steam Press (PSIG)	Condensate (LBS/HR)	Leaving Air Temp. (°F)
		RPM	W				
DUHS.15	55590	1400	130	1000	5	57.8	133
	59950				15	66.7	147
	75622				30	74.5	160
DUHS.24	86286	1400	140	1400	5	100.2	133
	97236				15	96.9	147
	113731				30	101.7	160
DUHS.30	111137	1400	140	1700	5	115.6	133
	124212				15	124.5	147
	165847				30	148.2	160
DUHS.36	131346	1400	165	2100	5	128.2	133
	149330				15	140.6	147
	172841				30	164.2	160
DUHS.62	228900	1400	310	3000	5	227.2	133
	259420				15	262.8	147
	296670				30	289.6	160
DUHS.68	312589	1400	320	3500	5	369.2	133
	355530				15	430.9	147
	375810				30	505	160

شرکت تولیدی صنعتی
داتیس کار

Steam Correction Factors

TABEL3:

Ent Air Temp °F	0	2	5	10	15	20	30	40	50	60	80	100	125	150
-30	1.131	1.162	1.99	1.258	1.307	1.349	1.41	1.481	1.53	1.581	1.651	1.715	1.79	1.845
-20	1.078	1.121	1.153	1.211	1.257	1.302	1.369	1.421	1.481	1.518	1.604	1.669	1.73	1.798
-10	1.031	1.018	1.106	1.164	1.211	1.253	1.315	1.379	1.429	1.479	1.556	1.619	1.692	1.754
0	0.982	1.018	1.057	1.116	1.164	1.199	1.269	1.329	1.405	1.41	1.49	1.52	1.634	1.701
10	0.938	0.971	1.011	1.069	1.116	1.157	1.22	1.29	1.398	1.378	1.46	1.53	1.598	1.658
20	0.891	0.912	0.965	1.019	1.073	1.114	1.181	1.241	1.296	1.339	1.401	1.481	1.55	1.6
30	0.845	0.878	0.919	0.975	1.025	1.065	1.134	1.198	1.245	1.293	1.368	1.427	1.49	1.568
40	0.77	0.798	0.846	0.955	0.996	1.068	1.125	1.175	1.222	1.301	1.362	1.432	1.492	1.552
50	0.752	0.781	0.817	0.875	0.931	0.974	1.045	1.101	1.152	1.198	1.269	1.341	1.399	1.471
60	0.709	0.738	0.779	0.829	0.918	1	1.058	1.105	1.151	1.231	1.297	1.36	1.419	1.482
70	0.659	0.693	0.731	0.791	0.831	0.879	1.935	1.01	1.062	1.106	1.186	1.25	1.32	1.38
80	0.616	0.646	0.681	0.741	0.792	0.834	0.905	0.963	1.016	1.061	1.129	1.201	1.271	1.325
90	0.568	0.6	0.631	0.691	0.731	0.781	0.86	0.9	0.961	1.012	1.088	1.151	1.221	1.282
100	0.521	0.551	0.59	0.64	0.691	0.728	0.81	0.871	0.92	0.961	0.999	1.1	1.181	1.124
120	0.419	0.46	0.51	0.556	0.601	0.647	0.72	0.78	0.829	0.873	0.923	0.998	1.051	1.108
140	0.336	0.361	0.39	0.45	0.512	0.55	0.626	0.678	0.737	0.781	0.858	0.913	0.981	1.055
160	0.235	0.271	0.3	0.36	0.41	0.46	0.528	0.591	0.638	0.688	0.77	0.82	0.901	0.961
180	0.15	0.18	0.225	0.27	0.315	0.38	0.44	0.49	0.54	0.586	0.671	0.75	0.801	0.87

Standard Ratings Are Based on 30 PSIG Steam PRESSURE
60°F Entering Air Temperature.
Corrected load = Rating From 3.4×Correction Factor From Table 5.

Hot Water Correction Factors

TABEL4:

Ent Air Temp. °F	Entering Water Temp °F										
	150	160	170	180	190	200	210	220	230	240	250
30	1.038	1.119	1.209	1.229	1.379	1.458	1.539	1.638	1.718	1.81	1.898
40	1.937	1.081	1.109	1.117	1.281	1.362	1.439	1.537	1.625	1.71	1.782
50	1.839	0.931	0.049	1.109	1.179	1.256	1.338	1.429	1.515	1.601	1.687
60	0.74	0.835	0.925	1	1.079	1.162	1.243	1.315	1.4	1.518	1.581
70	0.64	0.742	0.8119	0.9	0.99	1.066	1.149	1.238	1.319	1.402	1.48
80	0.549	0.648	0.74	0.821	0.901	0.982	1.259	1.138	1.219	1.298	1.38
90	0.481	0.562	0.639	0.721	0.801	0.879	0.958	1.051	1.132	1.215	1.279
100	0.401	0.476	0.559	0.712	0.788	0.889	0.957	1.039	1.118	1.156	1.177

CFM Correction Factors

TABEL5:

Entering Air Temperature °F									
10	20	30	40	50	60	70	80	90	100
1.11	1.08	1.06	1.04	1.02	1	0.98	0.96	0.95	0.93

Water Pressure Drop Correction Factor

TABEL6:

Percent Water Quantity (G.P.M.)												
50	60	70	80	90	100	120	130	140	150	160	170	180
0.3	0.4	0.5	0.7	0.8	1	1.4	1.6	1.8	2.1	2.3	2.6	2.8

شرکت تولیدی صنعتی
داتیس کار

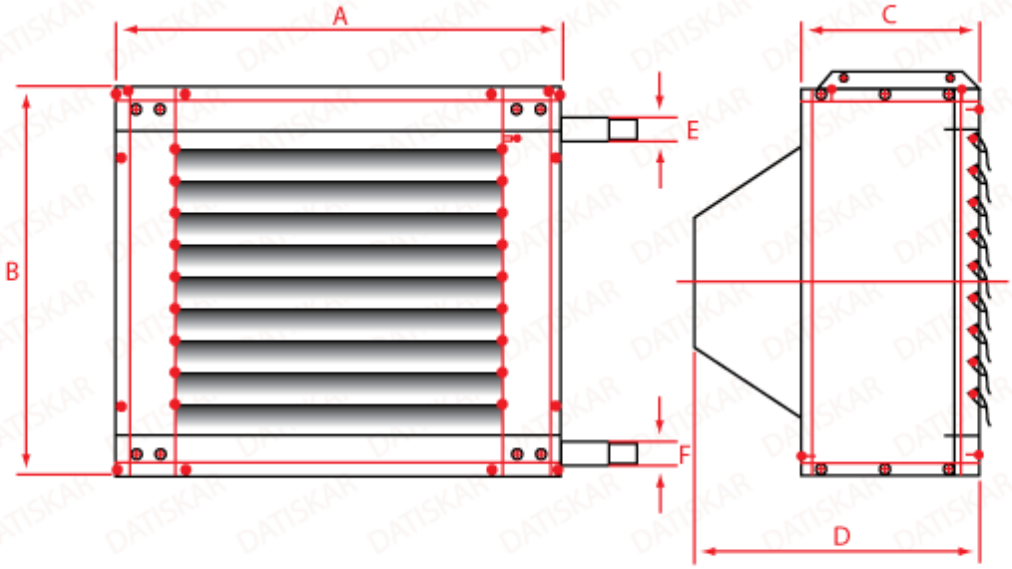

Datis Kar Unit Heater Are Offered in Eight Models in Hot Water And Six Models in Steam Capacity For Steam Units Range From 55590 to 375810 Btu/hr And For Hot Water Units From 38298 to 369397 Btu/hr Casting Are Made of Heavy Guage Steel Sheets Covered With a Layer of Quality Paint. Water Coils Are Made From Seamless Steel Tubes Both Types for Water Coils Are Aluminum or Copper Finned in Spiral Form. For Water Coils, Plate Fining is Also Available Upon Reduest. Statically And Dynamically Balanced Axial Fans Offer The Required CFM at Low Sound Levels. 3 Phase 380 V-50Hz or Single Phase 220 V-50 Hz Elec. Motors @1450 Rpm Offer Durable Performance

TABEL7:

Steam Unit Dimensions						
Model	A	B	C	D	E	F
DUS15	560	560	305	520	1 1/4"	1"
DUS24	650	560	305	520	1 1/4"	1"
DUS30	690	640	305	520	1 1/2"	1 1/4"
DUS36	770	640	305	520	1 1/2"	1 1/4"
DUS62	900	840	305	520	1 1/2"	1 1/4"
DUS68	1020	840	305	520	2"	1 1/2"

E:Inlet
F:Outlet

TABEL8:

Hot Water Unit Dimensions						
Model	A	B	C	D	E	F
DUH10	560	560	305	520	1"	1"
DUH16	650	560	305	520	1"	1"
DUH25	690	640	305	520	1 1/4"	1 1/4"
DUH31	770	640	305	520	1 1/4"	1 1/4"
DUH37	840	640	305	520	1 1/4"	1 1/4"
DUH52	900	840	305	520	1 1/2"	1 1/2"
DUH60	1020	840	305	520	1 1/2"	1 1/2"
DUH67	1060	960	305	520	2"	2"

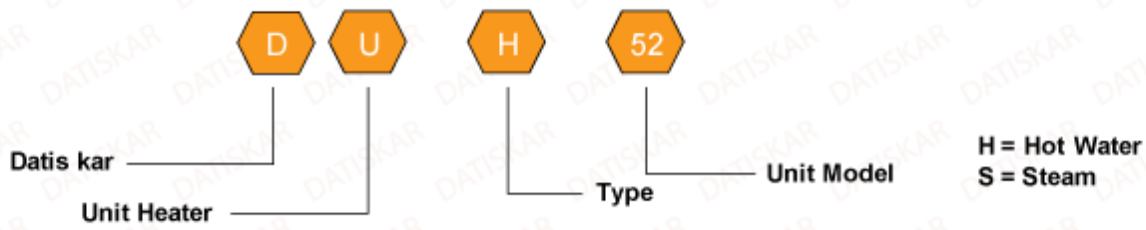

شرکت تولیدی صنعتی
داتیس کار

Unit Heater

- Complete Pakage Unit
- Hot Air Furnace
- Cooling Tower
- Heat Exchanger
- Air Handling Unit
- Steam Boiler
- Econopack
- Air Washer

تهران، خیابان میرداماد، میدان مادر، خیابان وزیری پور، کوچه خسروانی
پلاک ۴ ، طبقه ۴ ، واحد ۲۴ کد پستی: ۱۵۴۶۷۳۳۵۴۸
تلفن: ۸ – ۲۲ ۹۲ ۳۸ ۶۵ تلفکس: ۲۲ ۹۲ ۳۸ ۶۴
Web Site: www.datiskar.ir
E-mail: info@datiskar.ir

عضو انجمن تاسیسات ایران