داتیس کار

شرکت تولیدی صنعتی

DATISKAR

INDUSTRIAL CO.

چیلر

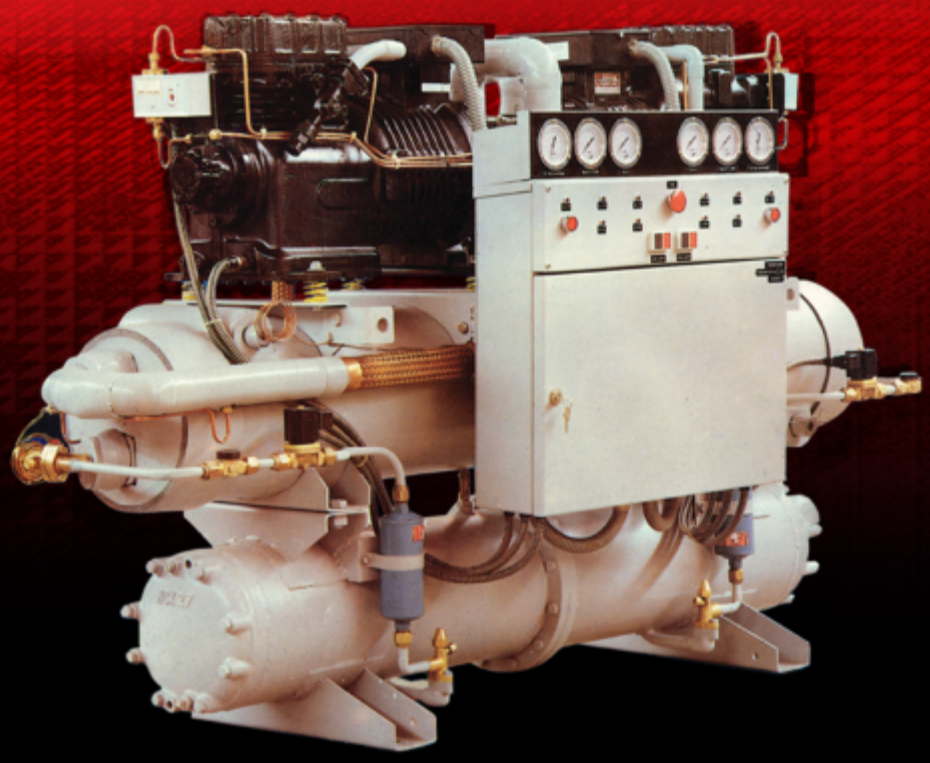

شرکت تولیدی صنعتی

Four Compressor Models

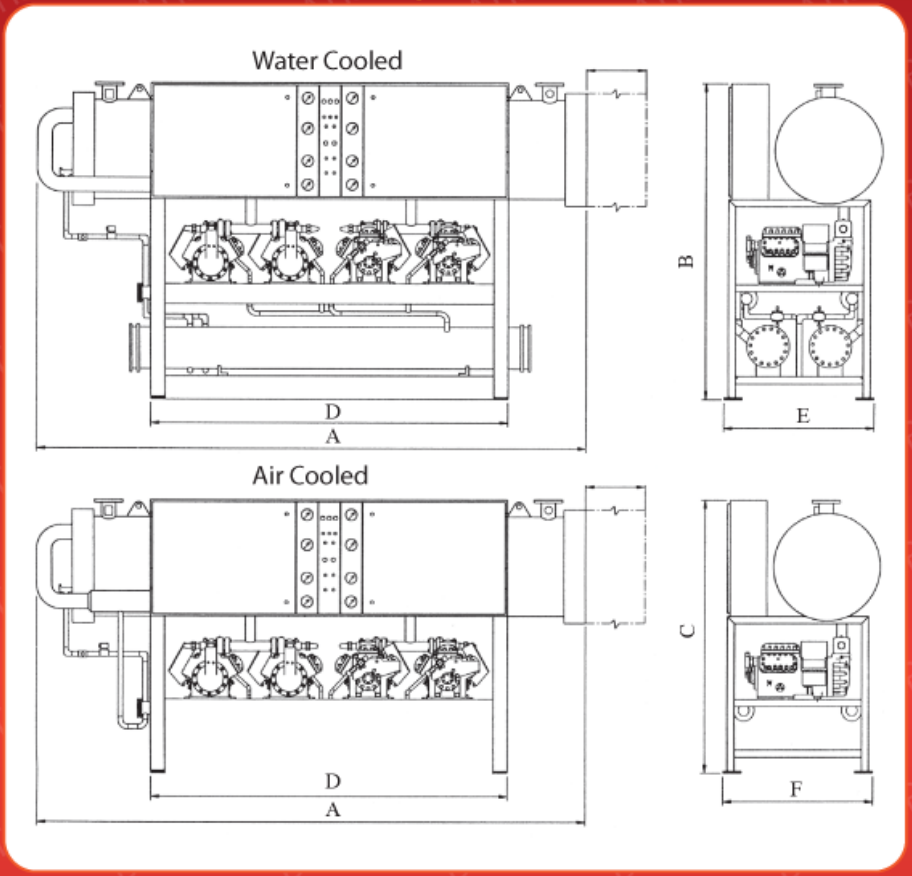

MODEL	A	B	C	D	E	F
DKC 100/4 W,A	3510	2080	1670	2510	1070	1270
DKC 120/4 W,A	3510	2080	1670	2510	1070	1270
DKC 140/4 W,A	3510	2080	1670	2510	1070	1270
DKC 160/4 W,A	3510	2080	1670	2510	1070	1270
DKC 200/4 W,A	4010	2080	1710	2910	1250	1250
DKC 240/4 W,A	4510	2180	1710	2910	1250	1250

DATISKAR

شرکت تولیدی صنعتی

Three Compressor Models

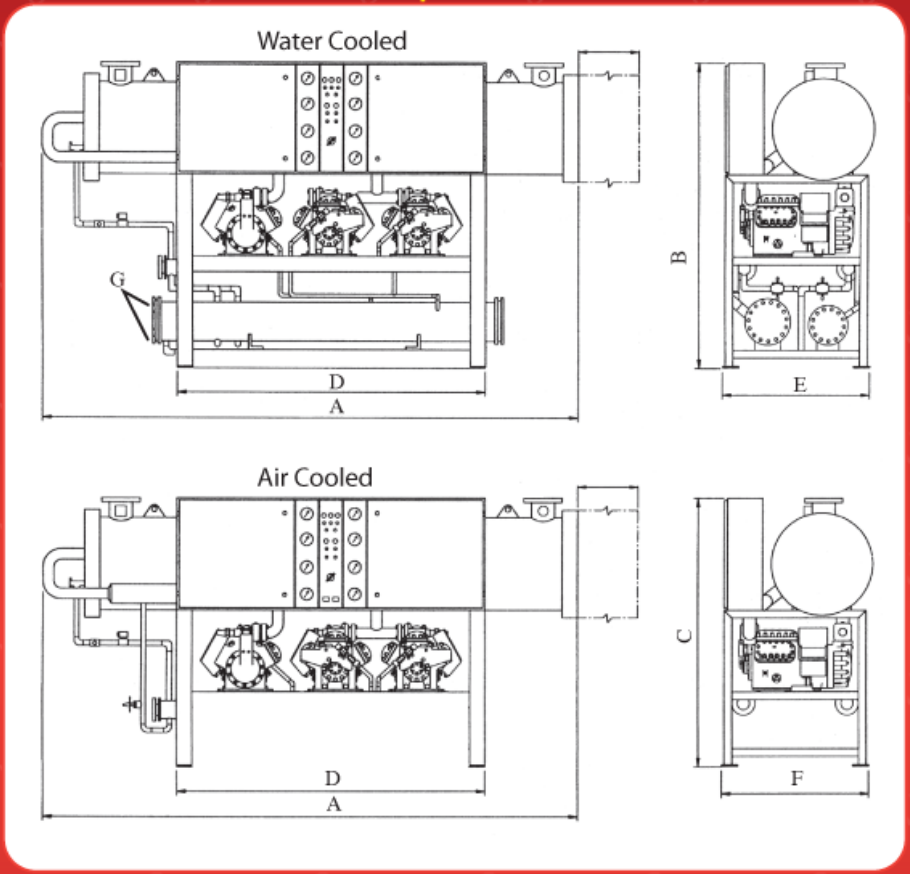

MODEL	A	B	C	D	E	F
DKC 60/3 W,A	3010	1950	1560	2010	950	1120
DKC 75/3 W,A	3010	1950	1560	2010	950	1170
DKC 90/3 W,A	3510	1950	1560	2010	995	1170
DKC 105/3 W,A	3210	1950	1560	2010	995	1170
DKC 120/3 W,A	3510	1980	1560	2010	995	1220

DATISKAR

شرکت تولیدی صنعتی

Two Compressor Models

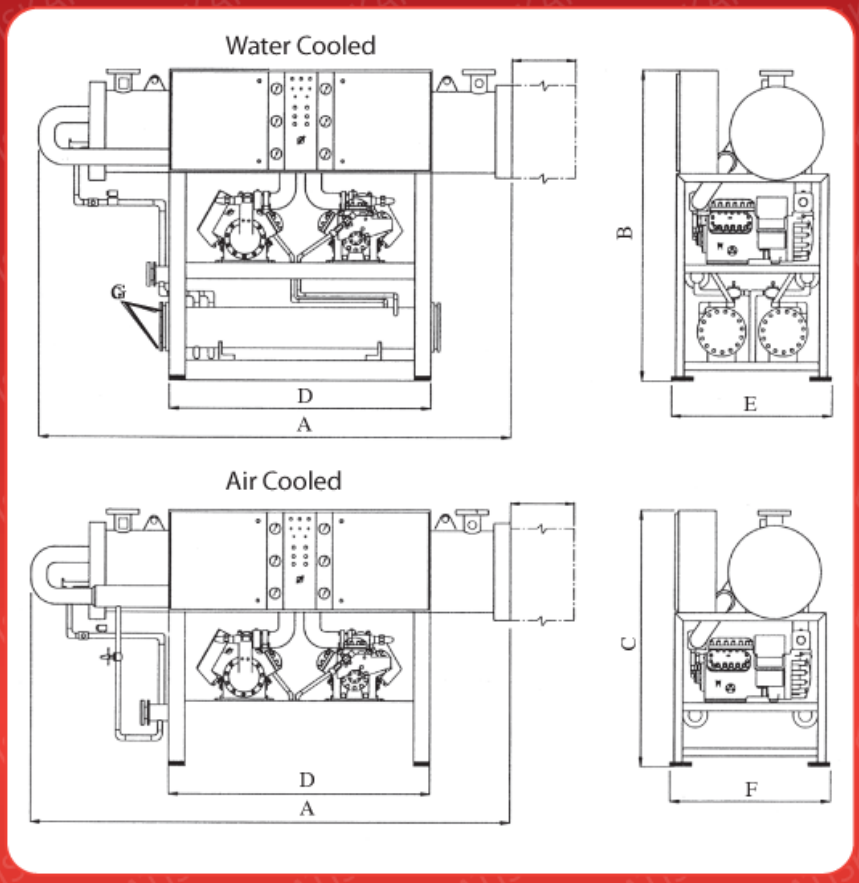

MODEL	A	B	C	D	E	F
DKC 10/2 W,A	2010	1630	1465	1510	865	965
DKC 15/2 W,A	2010	1630	1465	1510	865	965
DKC 20/2 W,A	2510	1730	1515	1510	865	965
DKC 30/2 W,A	2510	1730	1515	1610	915	1065
DKC 40/2 W,A	2510	1730	1515	1610	915	1065
DKC 50/2 W,A	2510	1780	1515	1610	915	1065
DKC 60/2 W,A	2910	1780	1515	1610	915	1065
DKC 70/2 W,A	2910	1780	1515	1610	1015	1065
DKC 80/2 W,A	2910	1780	1515	1610	1015	1065
DKC 100/2 W,A	3510	2040	1635	1750	1065	1265
DKC 120/2 W,A	3510	2040	1635	1750	1065	1265

DATISKAR

شرکت تولیدی صنعتی

One Compressor Models

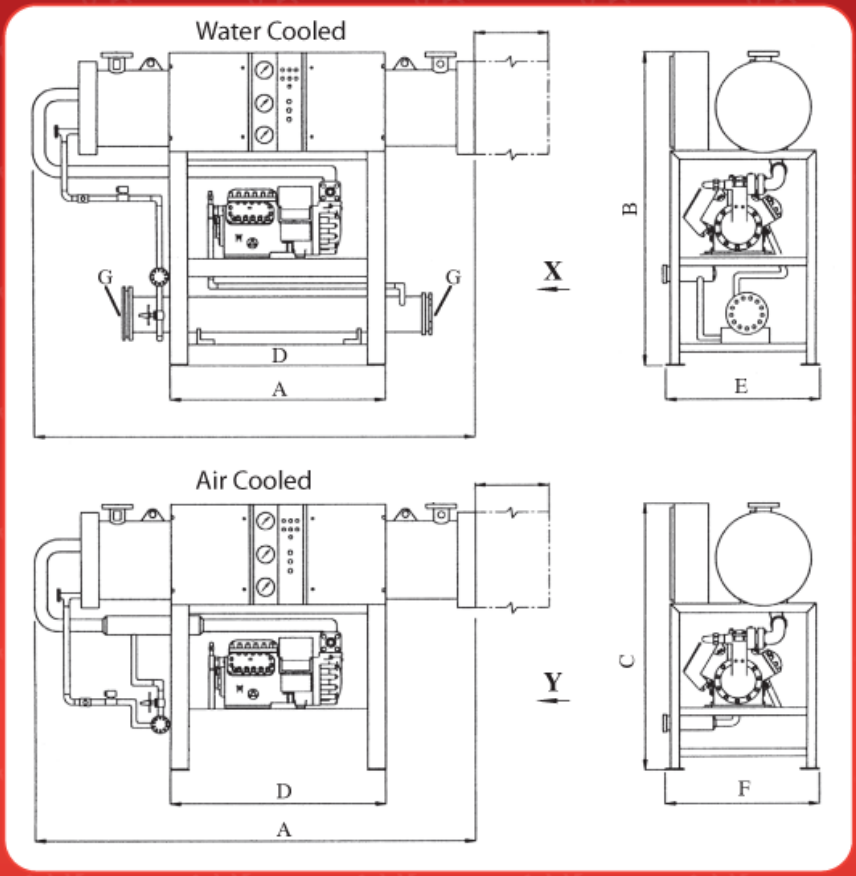

MODEL	A	B	C	D	E	F
DKC 8/1 W,A	1710	1580	1480	910	740	840
DKC 5/1 W,A	1710	1580	1480	910	790	890
DKC 10/1 W,A	1710	1580	1480	910	790	890
DKC 15/1 W,A	2010	1580	1480	910	790	890
DKC 20/1 W,A	2010	1630	1480	1010	790	890
DKC 25/1 W,A	2010	1630	1480	1010	790	890
DKC 30/1 W,A	2510	1730	1480	1210	790	890
DKC 35/1 W,A	2510	1730	1480	1210	790	890
DKC 40/1 W,A	2510	1730	1480	1210	790	920
DKC 50/1 W,A	2510	1730	1480	1210	790	920
DKC 60/1 W,A	2910	1730	1480	1210	790	920

DATISKAR

شرکت تولیدی صنعتی

MODELS	Condenser Leaving Water Temperature																			
	115					120					125					130				
	QE	WC	QC	COND	WFD	QE	WC	QC	COND	WFD	QE	WC	QC	COND	WFD	QE	WC	QC	COND	WFD
	TONS	KW	MBH	GPM	PD	TONS	KW	MBH	GPM	PD	TONS	KW	MBH	GPM	PD	TONS	KW	MBH	GPM	PD
Dkc 5/1	4.4	4.9	62.2	10.5	1.5	4.3	5.1	60	10.2	1.3	4.2	5.2	59	10	1.2	3.7	5.7	54.9	8.9	1.1
Dkc 10/1	8.6	8.9	131.9	20.6	2.3	8.3	9.3	128.8	19.9	2.2	7.9	9.6	125.7	18.9	2.1	7.3	10.1	119.8	17.5	1.8
Dkc 15/1	11.7	11.9	178.2	28	2.2	11.3	12.4	174.7	27.1	2	10.9	12.8	171.2	26.1	1.7	10.1	13.6	164.1	24.2	1.4
Dkc 20/1	14.3	13.6	215.5	34.2	2.6	13.9	14.2	211.5	33.3	2.4	13.4	14.7	207.4	32.1	2.2	12.5	15.7	199.3	29.9	2
Dkc 25/1	18	17.5	271.6	43.1	3.4	17.4	18.2	266.5	41.7	3.2	16.8	18.8	261.4	40.2	3	15.6	20	250.9	37.4	2.6
Dkc 30/1	21.5	21.2	324.6	51.5	4.5	20.7	22	318.2	49.6	4.2	19.9	22.7	311.5	47.7	4	18.4	24	298	44.1	3.5
Dkc 35/1	26.6	27.3	406.3	63.7	7.4	25.7	28.4	398.7	61.5	6.9	24.8	29.4	390.9	59.4	6.4	20.3	31.3	375.5	55.1	5.8
Dkc 40/1	30.3	32.9	389.7	72.5	4.4	29.2	33.1	456.4	69.9	4.1	28.1	34.2	447.2	67.3	3.8	26	36.4	428.8	62.3	3.1
Dkc 50/1	39	37.4	587.4	93.4	8.9	37.6	38.8	574.6	90.9	8.6	36.2	40.1	561.7	86.7	8.3	33.4	42.6	536.3	80	7.8
Dkc 30/2	23.4	23.9	357.2	56	5	22.6	24.7	350.2	54.1	4.7	21.8	25.6	343.2	52.2	4.4	20.2	27.2	329	48.4	3.9
Dkc 40/2	28.6	27.3	429.7	68.5	4.5	27.6	28.3	421.8	66.1	4.2	26.7	29.4	413.7	63.9	3.9	24.8	31.3	397.5	59.4	3.3
Dkc 50/2	35.7	35	539.6	85.5	7.1	34.5	36.3	529.5	82.6	6.8	33.3	37.6	519.3	79.7	6.5	30.9	39.9	498.5	74.3	5.9
Dkc 60/2	42.8	42.4	649.3	102.5	11.7	41.3	44	636.4	98.9	11.2	39.8	45.4	623.1	95.3	10.7	36.8	48.1	596.1	88.1	9.7
Dkc 70/2	52.6	54.6	812	125.9	16.7	50.7	56.7	797.3	121.4	16.2	48.9	58.8	781.9	117.1	15.7	45.4	62.6	751.6	108.7	15
Dkc 80/2	59.2	63.4	913.2	147.1	16.1	57.1	65.7	895.2	136.7	15.7	54.9	67.9	876.9	131.4	15.2	50.8	72.1	840.6	121.6	14.2
Dkc 100/2	78.6	75	1182	188.2	14	75.7	77.8	1157	181.2	13.5	72.8	80.5	1131	174.3	13	67.2	85.5	1080	160.9	12
Dkc 120/2	89.9	92.1	1375	215.2	13.1	86.5	95.4	1345	207.1	12.5	82.9	98.5	1311	198.5	12	75.3	103.4	1236	180.3	11
Dkc 60/3	42.9	40.9	645.4	102.7	11.1	41.5	42.5	633.5	99.4	10.6	40	44.1	621.4	95.8	10	37.3	47	597.2	89.3	8.9
Dkc 75/3	53.1	52.4	805	127.1	14	51.3	54.4	789.5	122.8	13.7	49.5	56.2	774.5	118.5	13.4	46	59.7	743	110.1	10.8
Dkc 90/3	63.9	63.4	963.1	153	11.6	61.6	65.7	943.6	147.5	11	59.4	67.8	923.6	142.2	10.4	54.9	71.8	883	131.4	9.2
Dkc 105/3	79.3	81.7	1206	189.9	11.8	76.5	84.8	1183	183.2	11	73.8	87.8	1160	176.7	10.2	68.4	93.5	1113	163.4	8.7
Dkc 120/3	87.8	94.6	1349	210.2	14.8	84.6	98	1322	202.6	13.8	81.5	101.3	1295	195.1	12.8	75.3	107.4	1241	180.3	10.9
Dkc 100/4	71.5	54.4	1075	171.2	7.8	69.1	72.5	1055	165.4	7.3	66.7	75	1034	159.7	6.8	62	79.7	992	148	5.8
Dkc 120/4	85.2	69.9	1285	204	8.3	82.2	87.6	1259	198.8	7.7	79.2	90.5	1233	189.6	7.1	73.3	95.5	1179	175.5	5.9
Dkc 140/4	105.6	84.5	1607	252.8	16.5	102	113.1	1577	244.2	15.9	98.3	117.1	4546	234.4	15.3	91.1	124.7	1484	218.1	14.1
Dkc 160/4	117.1	126.1	1801	280.4	12.9	112.9	130.7	1645	270.3	12	108.7	135.1	1729	260.3	11.1	100.5	143.3	1657	240.6	9.3
Dkc 200/4	156.4	149.8	2358	374.5	15.7	150.6	155.4	23.7	360.6	15.2	144.9	160.7	2256	346.9	14.7	134	170.5	2157	320.8	13.7
Dkc 240/4	179.4	184.1	2746	429.5	14.1	172.6	190.8	2686	413.2	12.8	165.4	196.8	2619	396	11.5	149.9	206.8	2466	358.9	9

DATISKAR

شرکت تولیدی صنعتی

MODELS	Condenser Leaving Water Temperature																	
	85						95						105					
	QE	WC	EVAP W.F.D		COND W.F.D		QE	WC	EVAP W.F.D		COND W.F.D		QE	WC	EVAP W.F.D		COND W.F.D	
	Tons	KW	GPM	PD	GPM	PD	Tons	KW	GPM	PD	GPM	PD	Tons	KW	GPM	PD	GPM	PD
Dkc 5/1	5.4	4.5	12.7	1.9	15.7	2.7	4.9	4.5	11.8	1.8	15	2.7	4.7	4.9	11	1.5	13.9	2.5
Dkc 10/1	10	7.4	23.7	2.9	28.5	6.2	9.3	7.9	22.3	2.7	27.3	5.7	8.7	8.5	20.6	2.3	26.2	5.5
Dkc 15/1	13.3	9.6	31.6	3.6	37.7	5.3	12.4	10.4	29.7	3.3	36.4	4.8	11.7	11.2	27.8	2.2	35.2	4.5
Dkc 20/1	16.1	11	38.4	3.5	45.5	6.2	15.1	11.9	36.3	3.1	44	5.7	14.3	12.8	34	2.6	42.5	5.3
Dkc 25/1	20.2	14	48.2	4.2	57.2	9.7	19	15.1	45.6	3.9	55.3	9	18	16.5	42.7	3.4	53.6	8.5
Dkc 30/1	24.2	17.3	57.6	5.7	68.8	7.5	22.7	18.7	54.3	5.1	66.4	6.9	22.1	20	51	4.4	64.1	6.4
Dkc 35/1	30	21.6	71.5	9.1	85.8	5.6	28.2	23.5	67.5	8.4	83	5	26.4	25.7	63	7.3	80.2	4.8
Dkc 40/1	34.3	25.9	82	6	98.7	5.1	32.1	27.8	77	5.2	95	4.6	30.3	30.1	72.3	4.4	91.9	4.3
Dkc 50/1	43.4	29.7	103.6	10.1	124.8	7.1	41	32.5	98.3	9.6	120.6	6.4	38.3	36	91.4	9	117.1	6
Dkc 30/2	26.5	19.1	63.2	6.6	75.5	5.3	24.8	20.7	59.5	5.7	72.8	4.8	23.3	22.5	55.6	4.8	70.4	4.5
Dkc 40/2	32.1	22	76.6	6.1	90.6	6.1	30.1	23.8	72.2	5.2	87.6	5.6	28.4	25.7	67.9	4.4	84.7	5.2
Dkc 50/2	40.1	27.8	95.8	9	113.6	9.5	37.7	30.2	90.4	8.1	109.9	8.8	35.5	33	84.8	7	106.4	8.3
Dkc 60/2	48.3	34.5	115.4	13.8	137.5	7.5	45.3	36.5	108.6	12.7	132.8	6.9	42.7	40.1	102.1	11.6	128.3	6.4
Dkc 70/2	59.8	43.2	142.9	18	171.3	5.6	56.3	46.9	134.9	17.1	165.8	5	52.7	51.4	125.9	16.7	160.1	4.8
Dkc 80/2	67.2	51.6	160.7	17	193.6	4.9	62.9	55.3	150.7	16.7	186.5	4.4	59.1	59.9	141.3	16	180.4	4.1
Dkc100/2	86.6	59.3	207	15.2	248.1	7.1	81.8	64.9	195.9	13.9	241.2	6.4	76.4	71.6	182.6	19.5	233.7	6
Dkc120/2	102.7	79.3	245.6	14.5	296.6	8.7	96	79.8	229.9	13.1	286.2	8.2	89.7	86.7	214.5	11.5	275.3	7.9
Dkc 60/3	48.1	32.9	114.9	13.1	135.9	6.1	45.3	35.7	108.6	12.2	131.7	5.6	42.8	38.4	102.2	11	127.3	5.2
Dkc 75/3	59.7	41.6	142.7	169.3	169.4	9.5	56.3	45.2	134.9	16	164.1	8.8	52.9	49.4	126.4	13.9	158.7	8.3
Dkc 90/3	72.1	51.5	172.4	203.9	204	7.5	67.7	55.2	162.2	13	196.7	6.9	63.8	59.9	152.5	11.5	190.3	6.4
Dkc105/3	89.6	64.4	214.3	254.7	254.8	5.6	84.2	70.2	201.7	13.1	246.4	5	78.8	76.9	188.4	11.6	237.9	4.8
Dkc120/3	100.1	75.8	239.4	285.7	285.8	4.9	94.9	82	227.3	17.2	287.1	4.4	87.9	89.4	210.2	14.8	266.4	4.1
Dkc100/4	82.1	55.5	192	9.3	226	7	75.8	60.3	181.6	8.7	219	6.4	71.3	65.9	170.5	7.7	211.9	6
Dkc120/4	96.2	68.6	231	10.3	272.1	8.6	90.9	73.2	217.7	9.5	263.2	8.2	85.1	79.9	203.5	8.2	254	7.9
Dkc140/4	119.5	85.9	285.9	18.5	339.5	6.7	112.1	93.6	269.2	17.7	328.4	6.2	105.1	102.6	251.4	16.4	317.2	5.6
Dkc160/4	133.3	101	318.9	16.6	381.4	8.2	125.5	109.5	300.6	14.8	368.9	7.6	117	119.2	280.4	12.9	355.8	7.1
Dkc200/4	171.4	119	410.6	16.7	493.3	10.4	162	130	387.9	15.3	479.8	9.8	151.3	343.5	362	13.5	442	8.5
Dkc240/4	204.1	144	488.4	17.5	590	10.8	196	159	457.4	15.6	570	10	177.6	173.5	425	12.9	548.6	9.3

DATISKAR

شرکت تولیدی صنعتی

CHILLER

- Complete Pakage Unit
- Hot Air Furnace
- Cooling Tower
- Heat Exchanger
- Air Handling Unit
- Steam Boiler
- Unit Heater
- Air Washer

تهران، خیابان میرداماد، میدان مادر، خیابان وزیری پور، کوچه خسروانی

پلاک ۴ ، طبقه ۴ ، واحد ۲۴ کد پستی: ۱۵۴۶۷۳۳۵۴۸

تلفن: ۸ – ۲۲ ۹۲ ۳۸ ۶۵ تلفکس: ۲۲ ۹۲ ۳۸ ۶۴

Web Site: www.datiskar.ir

E-mail: info@datiskar.ir

عضو انجمن تاسیسات